Closed fairing

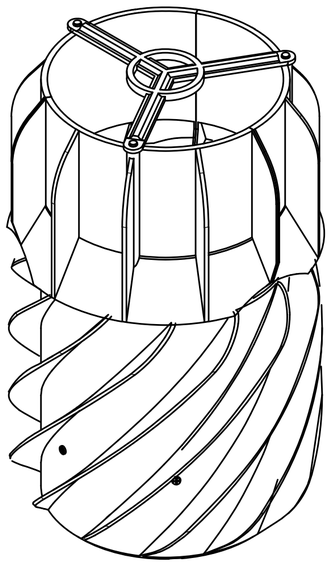

Isometric : Closed

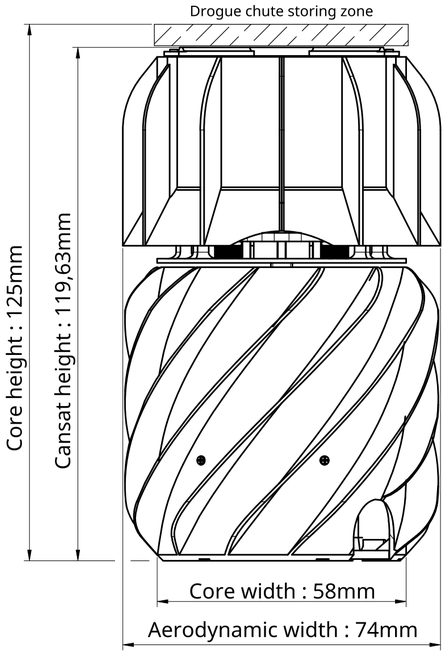

Front : Closed

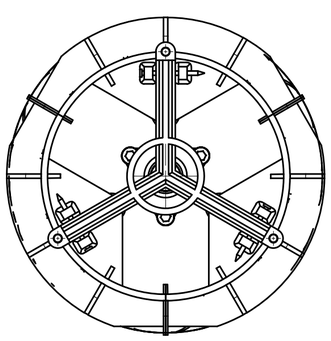

Top : Closed

Open fairing

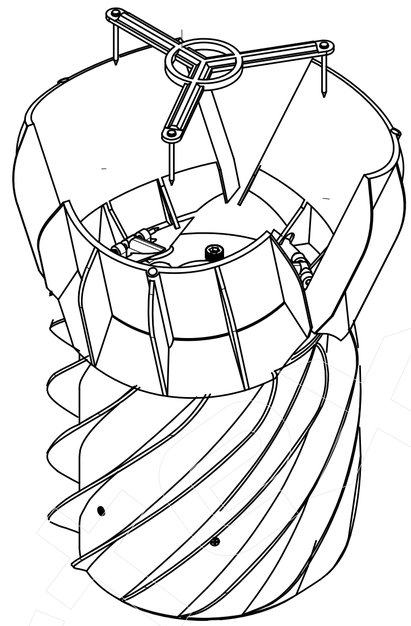

Isometric : Open

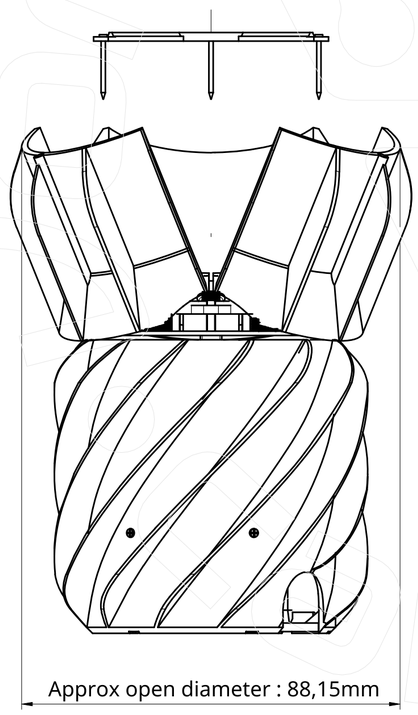

Front : Open

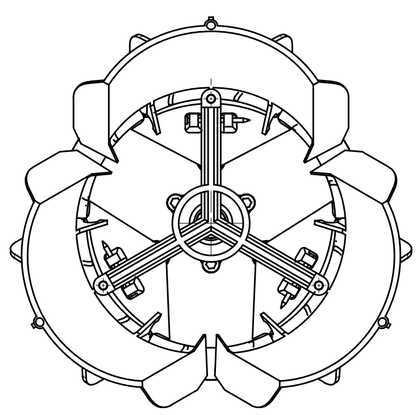

Top : Open

Internal skeleton A.K.A. "Skelec-ton"

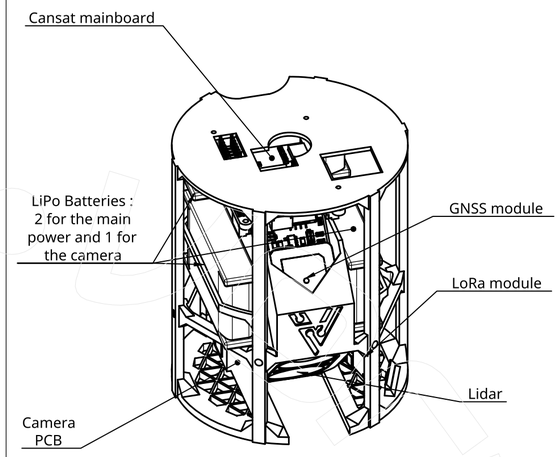

Isometric: Skeleton & Electrical components

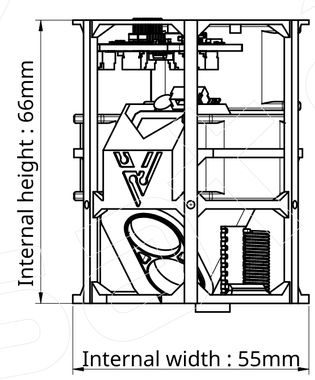

Front : Internal skeleton

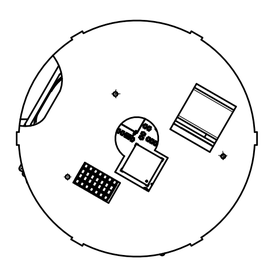

Top : Internal skeleton

Exploded assembly

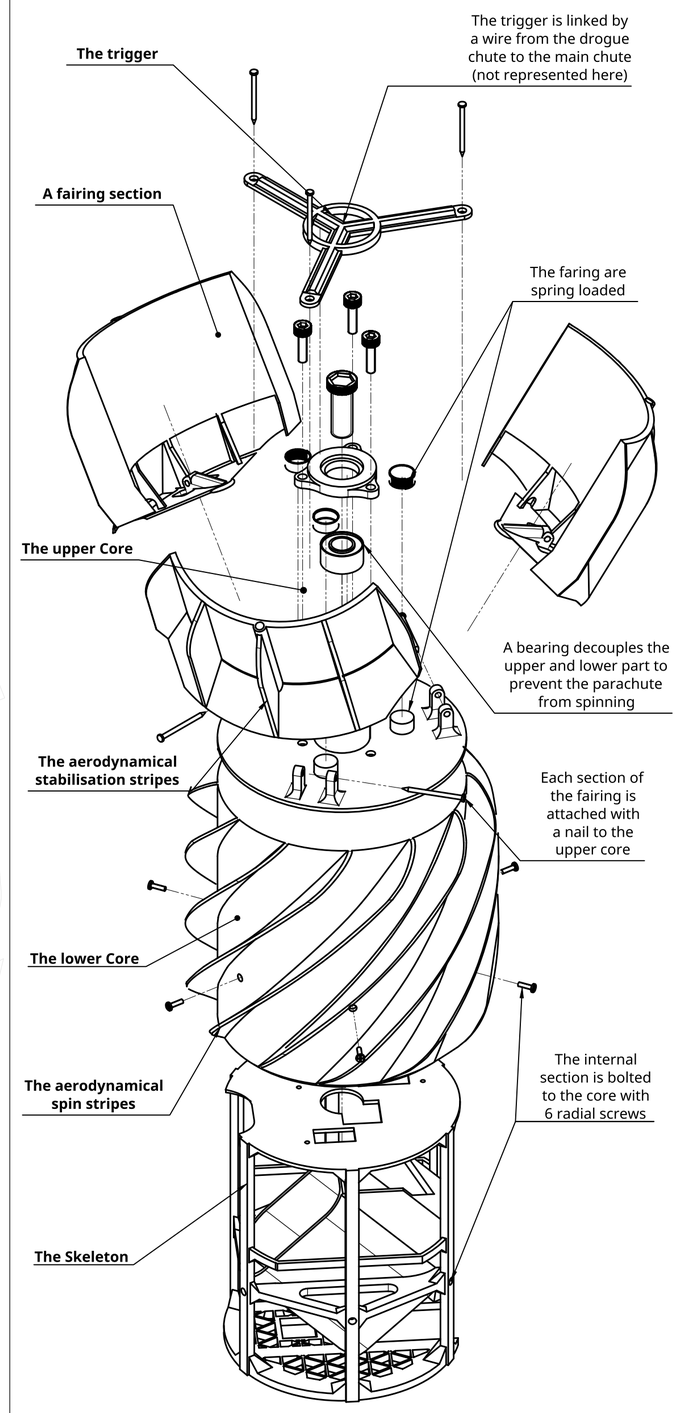

Isometric : Mechanical exploded view

The Core : Definition

The core of the cansat is a cylinder (Ø58mm, H125mm) that contains the skeleton (lower core), the drogue chutes and main chute (upper core)

Volumes	
Internal electronics (Skeleton)	157 mL
Upper + Lower Core volumes	330 mL
Core + aerodynamic stripes	550 mL

The drogues chutes are not represented here they will be stacked in the drogue chute storing zone (C6) the number of drogue chutes will determine the height of the fairing release

TEAM	NAME	ASSOCIATION	DATE
Vortex	ALEXEÏ DOUJILLARD	Ares ENSEA	2026-04-06
MATERIAL	PLA		

TITLE: Vortex Cansat
Triple fairing design &
Internal Electrical structure

SCALE 1:1 | WEIGHT 175g | SHEET 1 of 1